PIN	DESIGNATION	COLOUR
1	12 + VE	RED
2	GRND	BLK
3	SECTION 1	WHT
4	12 + VE	RED
5	GRND	BLK
6	SECTION 2	ORG/BLU
7	12 + VE	RED
8	GRND	BLK
9	SECTION 3	BLU/YEL
10	12 + VE	RED
11	GRND	BLK
12	SECTION4	PNK
13	12 + VE	RED
14	GRND	BLK
15	SECTION 5	BRN
16	12 + VE	RED
17	GRND	BLK
18	SECTION 6	BLU/WHT
19	12 + VE	RED
20	GRND	BLK
21	SECTION 7	WHT/YEL
25	12 + VE	RED
26	GRND	BLK
27	SECTION 9	BRN/YEL
28	12 + VE	RED
29	GRND	BLK
30	SECTION 10	YEL/BLK

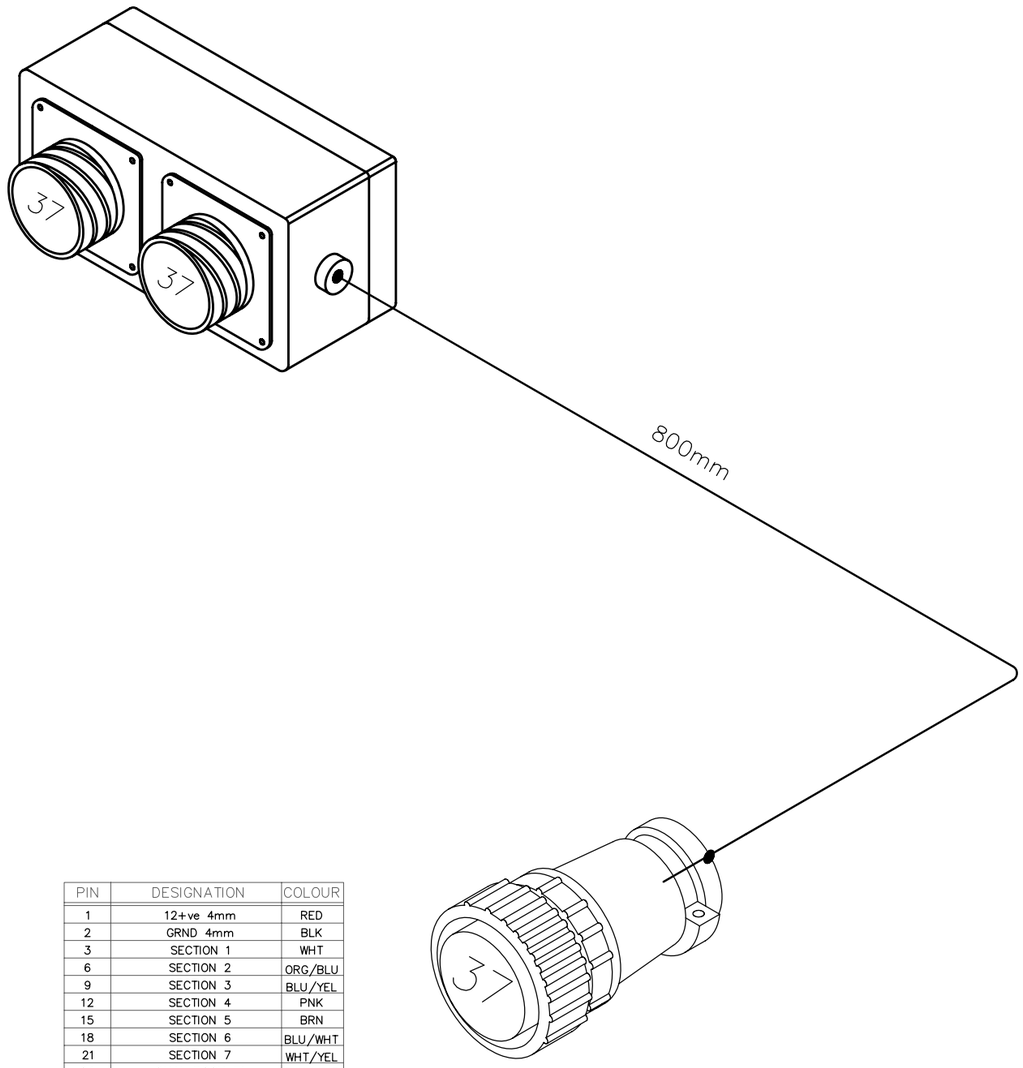

PIN	DESIGNATION	COLOUR
1	12+ve 4mm	RED
2	GRND 4mm	BLK
3	SECTION 1	WHT
6	SECTION 2	ORG/BLU
9	SECTION 3	BLU/YEL
12	SECTION 4	PNK
15	SECTION 5	BRN
18	SECTION 6	BLU/WHT
21	SECTION 7	WHT/YEL
24	DUAL BOOM T1	BLK/WHT
27	SECTION 9	BRN/YEL
30	SECTION 10	YEL/BLK
32	GRND	BLK
33	DUAL BOOM T2	BLK/RED
34	12 +ve 4mm	RED
35	GRND 4mm	BLK

CBLOOM/DUAL RAVEN
DUAL BOOM CONTROL
SPRAYER LOOM

CROPLANDS

Note: Drawing is for illustration purpose only

22nd FEBRUARY 2011