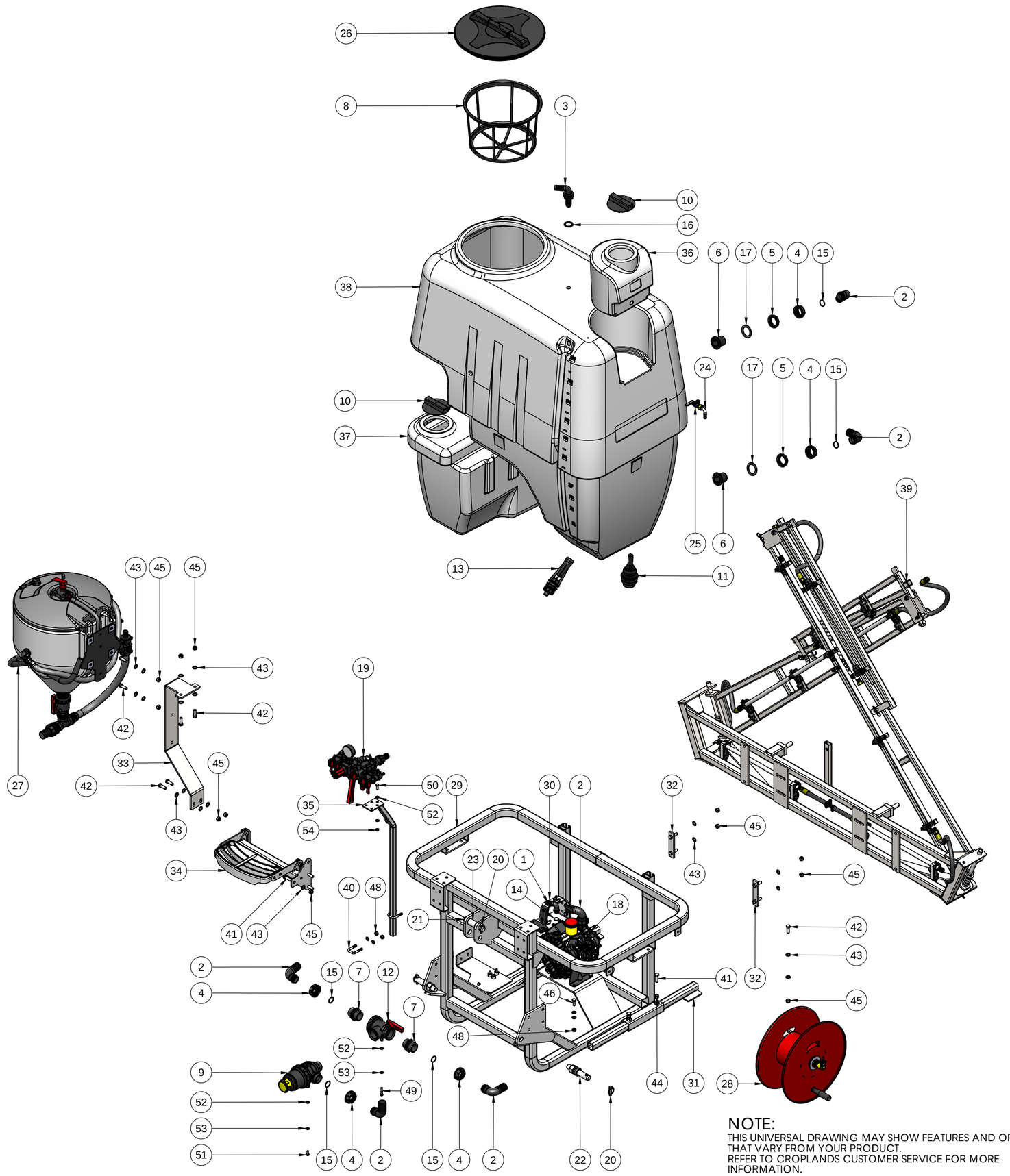

ITEM NO.	PART NUMBER	DESCRIPTION	Default/QTY.
1	A116425	ELBOW 0.25 FOR FLY	1
2	A116640	ELBOW 1 1/2"	6
3	A118426	PIPE 1 X 1 SINGLE PIECE 90 DEG	1
4	A200060	FLY NUT 1 1/2"	5
5	A205060	BACK NUT 1 1/2"	2
6	A220060	TANK OUTLET 1 1/2"	2
7	A250060	NIPPLE 1 1/2"	2
8	A300130	FILTER BASKET LARGE 254MM DEEP	1
9	A314463	FILTER 1 1/2" 50M SH/THR SOV	1
10	A3522000	BREATHER FOR 355MM & 455MM LID	2
11	A452107	VALVE 2" ANTI POLLUTION DRAIN	1
12	A454236	BALL VALVE POLY 1 1/2" 3 WAY	1
13	A5022042	AGITATOR STRAIGHT #2 CERAMIC JET	1
14	AG10041	O RING 1"	1
15	AG10061	O RING 1 1/2"	6
16	AG40004	FLAT SEAL 1" EPDM	1
17	AG40006	FLAT SEAL 1 1/2" EPDM	2
18	AR80LFP-C	PUMP AR80 POLY BP C+PC	1
19	ARUCM-4	UCM 4 WAY LESS FILTER #30029	1
20	B0006	BARE LINCH PIN 7/16" DIA	3
21	B0076	TOP LINK PIN 3" X 7/16"	1
22	B0102	IMPLEMENT PIN CAT 2	2
23	B0519	BUSH CAT 2-3	1
24	B163.604.13	ELBOW 1/2" C/W HEX NUT 1/2"	1
25	B165.1501.5	BALL VALVE 1/2" X 1/2" RH	1
26	G8161000	LID/RING KIT 455MM	1
27	KB-1003A	CHEMICAL MIXING UNIT 60LT PROD	1
28	L-R2412	HOSEREEL SIDE MOUNT 30M TGUN	1
29	LP060	FRAME 600LT AGRIPAK FARMATE	1
30	LP060-1	FLUSH TANK BRACKET	1
31	LP060-5	FOOT EXTENSION	2
32	LP060-7-2	BOOM MOUNT 600LT	2
33	LP060-8	CHEMIFLUSH BRACKET LINKAGE	1
34	LP060-9	LINKAGE STEP ASSEMBLY KIT	1
35	LP-121	CONTROLLER BRACKET LINKAGE	1
36	P600-15L	15LT HAND WASH TANK TO SUIT 600/800LT	1
37	P600-90L	90LT FLUSH TANK TO SUIT 600/800LT	1
38	P800L	800LT LINKAGE CHEMICAL TANK	1
39	MAX08	MAX 8M BOOM COMPLETE	1
40	XBMBB32	U BOLT 32MM	2
41	M12X40	M12 X 40 HEX HEAD SET SCREW HT ZP	5
42	M12X35	M12 X 35 SET SCREW HT ZP	8
43	M12FWASHER	M12 FLAT WASHER ZP	26
44	M12HNUT	M12 HEX NUT HT ZP	2
45	M12NNUT	M12 NYLOC NUT HT ZP	15
46	M10X30	M10 X 30 SET SCREW HT ZP	6
47	M10FWASHER	M10 FLAT WASHER ZP	16
48	M10NNUT	M10 NYLOC NUT HT ZP	10
49	M8X40BOLT	M8 X 40 HEX HEAD BOLT HT ZP	3
50	M8X25	M8 X 25 SET SCREW HT ZP	2
51	M8X20	M8 X 20 SET SCREW HT ZP	3
52	M8FWASHER	M8 FLAT WASHER ZP	10
53	M8SWASHER	M8 SPRING WASHER ZP	6
54	M8NNUT	M8 NYLOC NUT HT ZP	2

LA800/MAX08/HR2 PARTS ILLUSTRATION

THIS DRAWING IS FOR ILLUSTRATION PURPOSE ONLY
PLEASE REFER TO THE PARTS LIST.

NOTE:

THIS UNIVERSAL DRAWING MAY SHOW FEATURES AND OPTIONS THAT VARY FROM YOUR PRODUCT.
REFER TO CROPLANDS CUSTOMER SERVICE FOR MORE INFORMATION.

UNLESS OTHERWISE SPECIFIED:
DIMENSIONS ARE IN MILLIMETERS
SURFACE FINISH: ± 0.2
TOLERANCES:
LINEAR: ± 0.5
ANGULAR: ± 0.5

FINISH: N/A

DEBUR AND BREAK SHARP EDGES

DO NOT SCALE DRAWING

ISSUE: B

CROPLANDS
A NUFARM LIMITED COMPANY

	NAME	SIGNATURE	DATE	REVISION
DRAWN	RPJUCO		250615	
CHK'D				
APPV'D				
MFG				
Q.A				

MATERIAL: N/A

WEIGHT:

TITLE: **800LT AGRIPAK LINKAGE**

LA800/MAX08/HR2 PARTS ILLUSTRATION

DWG NO. LA800MAX08HR2

A2

SCALE: 1:15

SHEET 1 OF 1

COPYRIGHT PROPRIETOR
THIS DRAWING IS THE PROPERTY OF CROPLANDS PTY. LTD.
AND MUST BE TREATED AS CONFIDENTIAL.
REPRODUCTION OF THIS DRAWING (OR PART THEROF) OR COMMUNICATION OF ITS CONTENTS IS PROHIBITED WITHOUT THE CONSENT OR AUTHORITY OF CROPLANDS PTY. LTD.