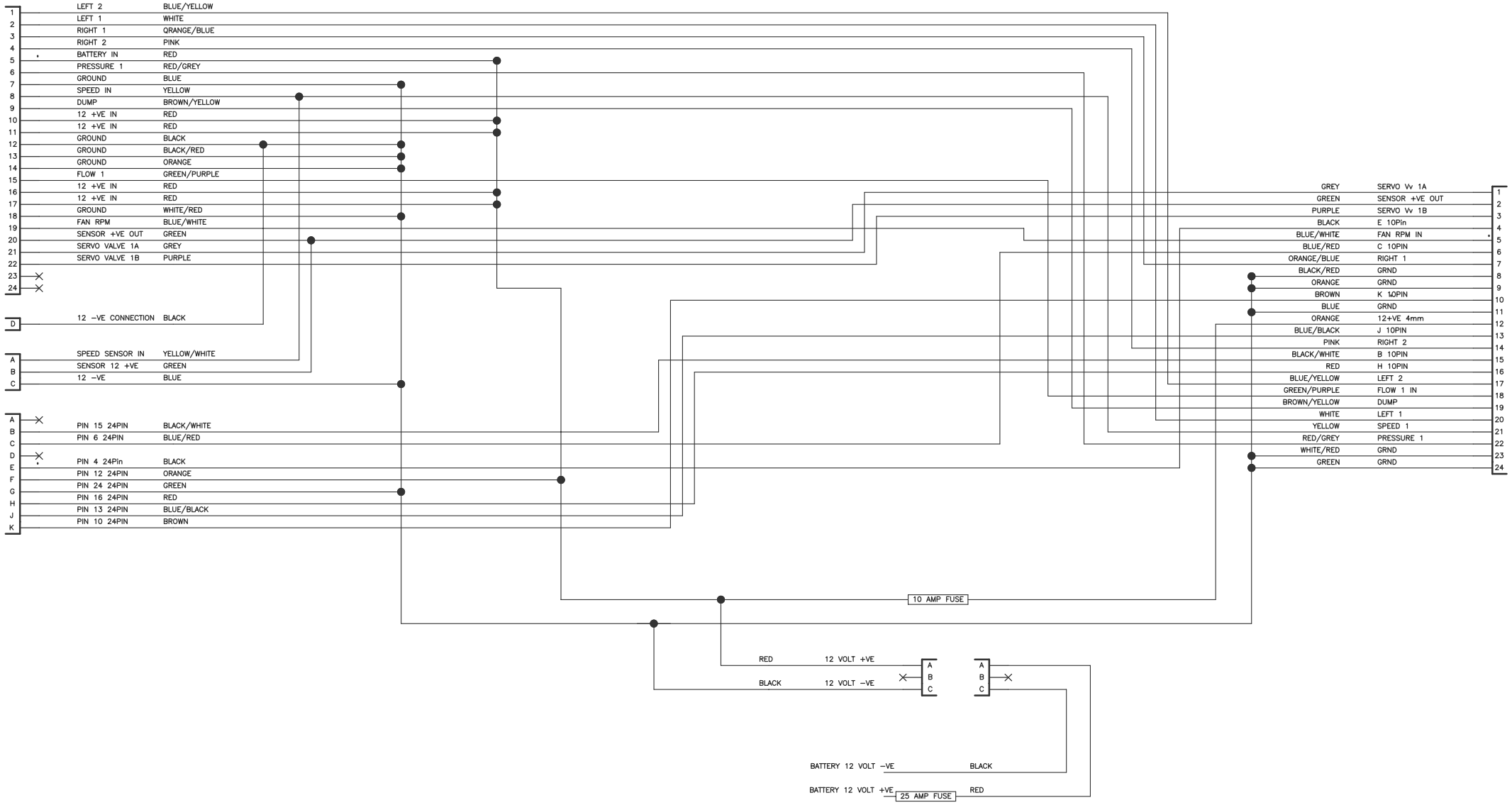

HV40LOOM/2 CONTROLLER LOOM

TRACTOR END

CROPLANDS
A Nufarm Limited Company