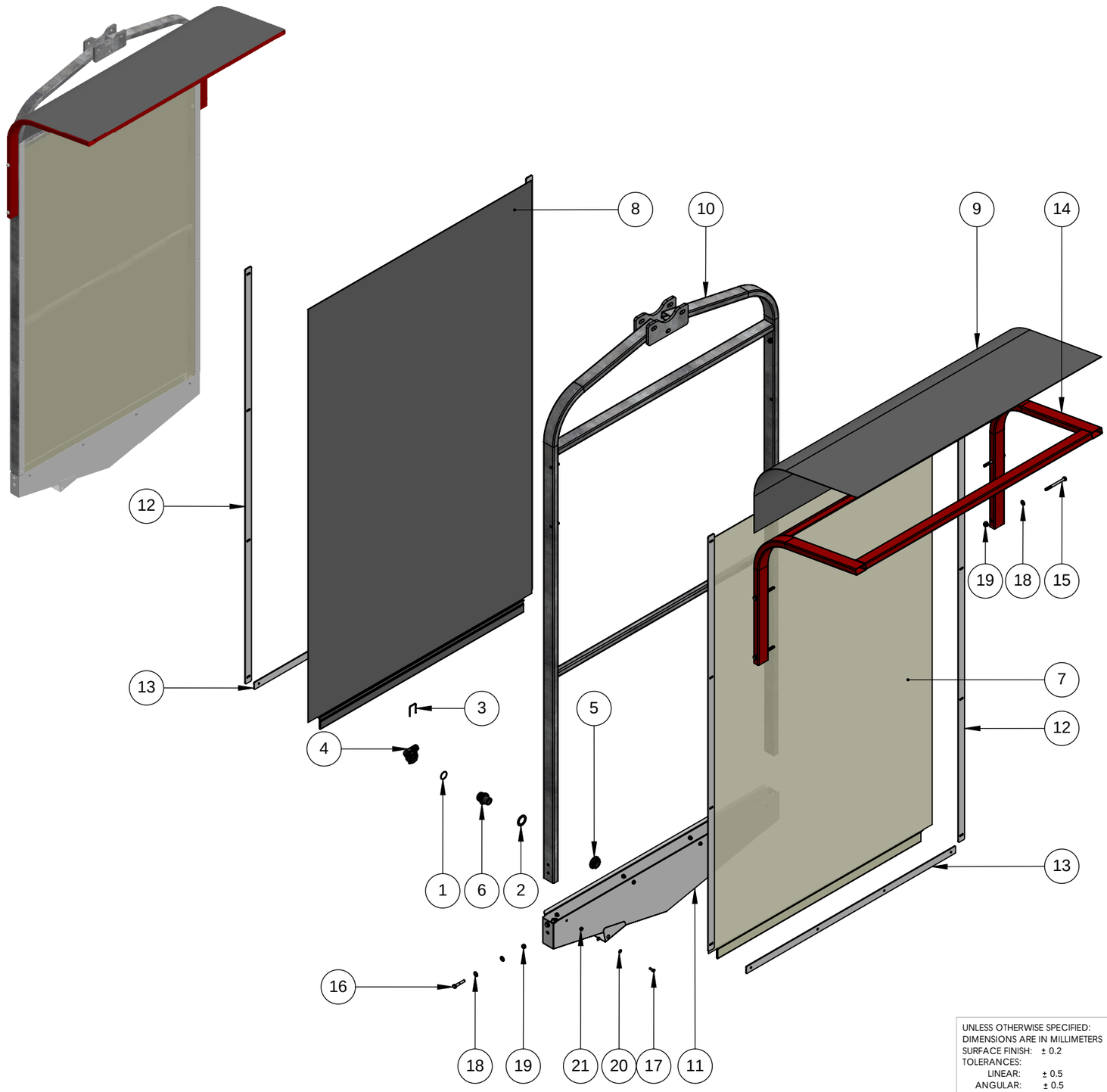

ITEM NO.	PART NUMBER	DESCRIPTION	QTY.
1	AG11058	O-RING	1
2	AG40003	FLAT SEAL 3/4" EPDM	1
3	A010003	MANIFOLD FORK T3	1
4	A1190320	ELBOW T3F D.20	1
5	A205030	BACK NUT 3/4"	1
6	A249133	HOSETAIL T3M 3/4M	1
7	HP-325-04	SCREEN MESH OUTER RECAPTURE	1
8	HP-325-05	SCREEN BACK OUTER RECAPTURE	1
9	HP-325-06	AWNING OUTER RECAPTURE	1
10	HP-325-09	RECAPTURE FRAME OUTER	1
11	HP-325-09-1R	RECAPTURE TROUGH LH	1
12	HP-325-09-2	RECAPTURE VERTICAL STRAP OUTER	4
13	HP-325-09-3	RECAPTURE STRAP HORIZONTAL OUTER	2
14	HP-325-10	RECAPTURE CANOPY OUTER	1
15	M8X90BOLT	M8 X 90 HEX HEAD BOLT ZP	4
16	M8X45BOLT	M8 X 45 HEX HEAD BOLT HT ZP	4
17	M6X16SSSCREW	M6 X 16 SET SCREW SS	8
18	M8FWASHER	M8 FLAT WASHER ZP	16
19	M8NNUT	M8 NYLOC NUT HT ZP	8
20	M6FWASHER	M6 FLAT WASHER ZP	16
21	M6NNUT	M6 NYLOC NUT HT ZP	8

KH-5117R PARTS ILLUSTRATION

THIS DRAWING IS FOR ILLUSTRATION PURPOSE ONLY
PLEASE REFER TO THE PARTS LIST.

UNLESS OTHERWISE SPECIFIED:
DIMENSIONS ARE IN MILLIMETERS
SURFACE FINISH: ± 0.2
TOLERANCES:
LINEAR: ± 0.5
ANGULAR: ± 0.5

FINISH: N/A

DEBUR AND BREAK SHARP EDGES

DO NOT SCALE DRAWING

ISSUE: A

CROPLANDS
A NUFARM LIMITED COMPANY

	NAME	SIGNATURE	DATE	REVISION
DRAWN	RPJUCO		231019	
CHK'D				
APPV'D				
MFG				
Q.A				

TITLE: **QM SMART SPRAY**

RIGHT HAND OUTER RECAPTURE ASSEMBLY

MATERIAL: N/A

WEIGHT:

DWG NO. KH-5117R

A3

SCALE: 1:16

SHEET 1 OF 1

COPYRIGHT PROPRIETOR

THIS DRAWING IS THE PROPERTY OF CROPLANDS PTY. LTD.
AND MUST BE TREATED AS CONFIDENTIAL.
REPRODUCTION OF THIS DRAWING (OR PART THEREOF) OR COMMUNICATION OF
ITS CONTENTS IS PROHIBITED WITHOUT THE CONSENT OF CROPLANDS PTY. LTD.