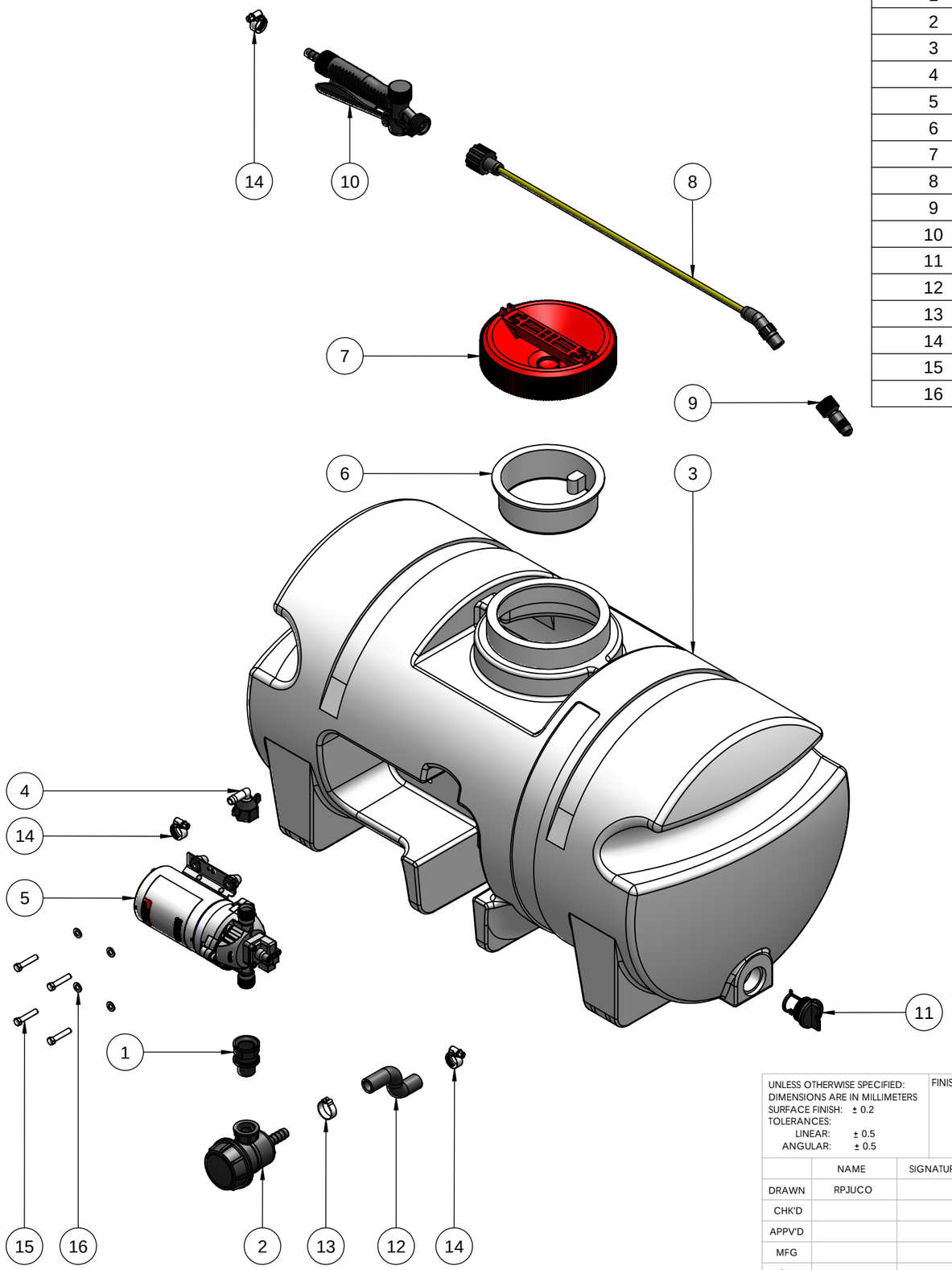

ITEM NO.	PART NUMBER	DESCRIPTION	QTY.
1	A245022	NIPPLE 1/2" MALE/FEMALE	1
2	A309953	FILTER 1/2" BLACK PP 50MESH	1
3	P60B-RAW	TANK 60LT UTEPAK W/O FITTING	1
4	SHU234-3916	1/2" NPT X 3/8" ELBOW SWIVEL BARB	1
5	SHU8000-547-189	PUMP 12V 107PSI 6.8L SANTO-VITON	1
6	SW501-004	LID STRAINER	1
7	SW502-001C	TANK LID ASSEMBLY RED	1
8	SW803-085	BRASS LANCE 52CM CURVED	1
9	SW803-262C	ADJ PLASTIC NOZZLE & CAP NUT	1
10	SW808-073-C	SHUT OFF VALVE F/ 3/8" ID HOSE	1
11	UP-416	BOAT PLUG	1
12	UP-501	S BEND HOSE EPDM BLACK	1
13	COBRAC18-198	COBRAC CLAMP 1/2" BLACK HOSE	1
14	TR38HC	HOSE CLAMP 10MM 3/8" WORM DRIVE	3
15	M6X30	M6 X 30 SET SCREW HT ZP	4
16	M6FWASHER	M6 FLAT WASHER ZP	4

US60S PARTS ILLUSTRATION

THIS DRAWING IS FOR ILLUSTRATION PURPOSE ONLY
PLEASE REFER TO THE PARTS LIST.

UNLESS OTHERWISE SPECIFIED:
DIMENSIONS ARE IN MILLIMETERS
SURFACE FINISH: ± 0.2
TOLERANCES:
LINEAR: ± 0.5
ANGULAR: ± 0.5

FINISH: N/A

DEBUR AND BREAK SHARP EDGES

DO NOT SCALE DRAWING

ISSUE: B

CROPLANDS
A NUFARM LIMITED COMPANY

	NAME	SIGNATURE	DATE	REVISION
DRAWN	RPJUCO		270317	
CHK'D				
APPV'D				
MFG				
Q.A				

TITLE: **OPTIMA**

UTEPAK 60LT 12V 6.8LPM PUMP

MATERIAL: N/A

WEIGHT:

DWG NO. US60S

A3

SCALE: 1:6

SHEET 1 OF 1

COPYRIGHT PROPRIETOR

THIS DRAWING IS THE PROPERTY OF CROPLANDS PTY. LTD.
AND MUST BE TREATED AS CONFIDENTIAL.
REPRODUCTION OF THIS DRAWING (OR PART THEREOF) OR COMMUNICATION OF
ITS CONTENTS IS PROHIBITED WITHOUT THE CONSENT OF CROPLANDS PTY. LTD.